PEGASUS™

BONDBOX™

Eliminate Ground Lugs and Copper Wire!

Simply connect your ground wire to the integrated lug.

Quality Control

Pre-installed form for site capture of array details for future reference.

Full Metal Bracket

Thick aluminum bracket secures BondBox to the rail, for an enduring connection that won't fail.

Better By Design

No-slip feet for steep roof traction.
Stackable for easy transport.
Slots for WAGO 221 connectors.
Weep holes for drainage.

Lay-in Bus Bar

Additional openings for grounding multiple arrays. Connections can be mid-wire.

The Secret Agent of System Grounding

BondBox takes the junction box to the next level, with an integrated ground lug, rigid attachment and enhanced features. ***Fast, flexible, efficient***.

Integrated Ground Lug

Eliminate the need for copper wire and ground lugs

Quality Control

Pre-installed form for site capture of array details for future reference

Code Compliant

UL2703 Certified
UL1741 Certified
NEMA 3R Enclosure

25-Year Warranty

Manufactured with advanced materials and coatings to outlast the roof itself

Pegasus Solar Inc | 506 West Ohio Avenue, Richmond, CA 94804 | **www.pegasussolar.com**

PEGASUS

BONDBOX™

1
Install Pegasus SkipRail System.

2
Click BondBox into Pegasus Rail.

Torque bolt to 150-180in-lbs.

3
Drill through one of the pre-marked locations for conduit.

Install conduit.

4
Insert ground wire into the grounding bus.

Torque screw to 20-25 in-lbs.

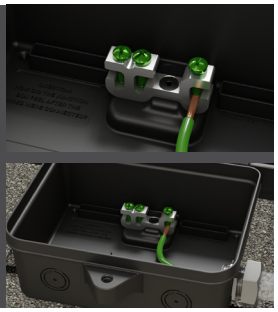

5
Finish wiring arrays.

Write installation details on pre-installed site capture label.

6
Close & fasten BondBox.

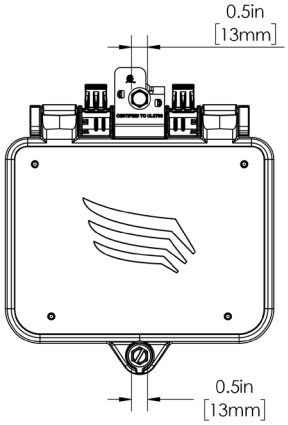

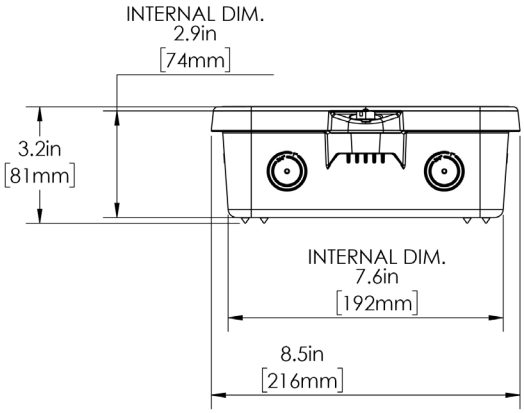

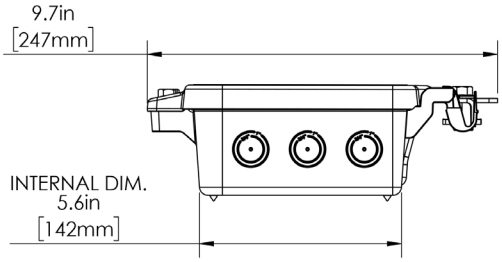

Specifications	BONDBOX
SKU	PSR-BBOX
Grounding	Integrated Ground Lug for up to 3 wires
Fits Ground Wire Size	6 AWG to 10 AWG
Enclosure Rating	NEMA 3R
Enclosure Volume	115 Cubic Inches (1900 Cubic Centimeters)
Maximum Voltage	999 VDC / 240 VAC
Maximum Current	99 AMPS
Certifications	UL2703 and UL1741
Compatible Rail	All Pegasus Rails
Kit Quantity	1

C US

SCAN FOR VIDEO

SCAN FOR FREE TRIAL

See www.PS-IP.com for intellectual property details. All rights reserved, ©2024 Pegasus Solar Inc.